NO.	DATE	REVISION & DESCRIPTION	REVIEWED / CHECKED SIGNATURE
1			

AM-100T
ANEMOMETER TRANSMITTER

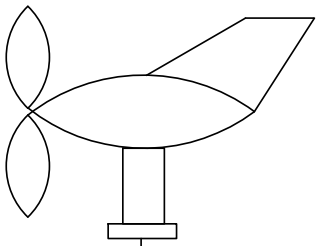

4x0.75

AM-100TJ
WATERTIGHT BOX

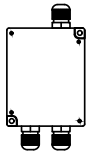

4x0.75

AM-100J
JUNCTION BOX

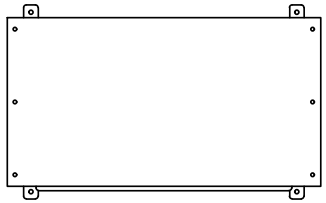

AM-100R(1)
REMOTE BUTTON

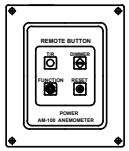

AM-100D(1)
DISPLAY UNIT

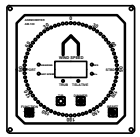

4x0.4

AM-100R(4)
REMOTE BUTTON

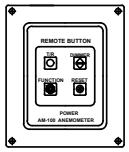

AM-100D(4)
DISPLAY UNIT

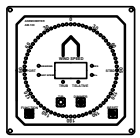

4x0.4

2x0.4 ← GYRO COMPASS

2x0.4 ← SPEED LOG

2x0.4 → NMEA OUTPUT 6

2x0.4 → NMEA OUTPUT 5

2x0.4 → NMEA OUTPUT 4

2x0.4 → NMEA OUTPUT 3

2x0.4 → NMEA OUTPUT 2 （INS）

2x0.4 → NMEA OUTPUT 1 （VDR）

2x1.0 ← POWER INPUT AC110V/220V

APPLICATION	AM-100 ANEMOMETER SYSTEM DIAGRAM
DATE	
APPROVAL	
CHECKED	
DRAWING	
DWG. NO.	AM100-ID-001

NSR NEW SUNRISE CO., LTD.

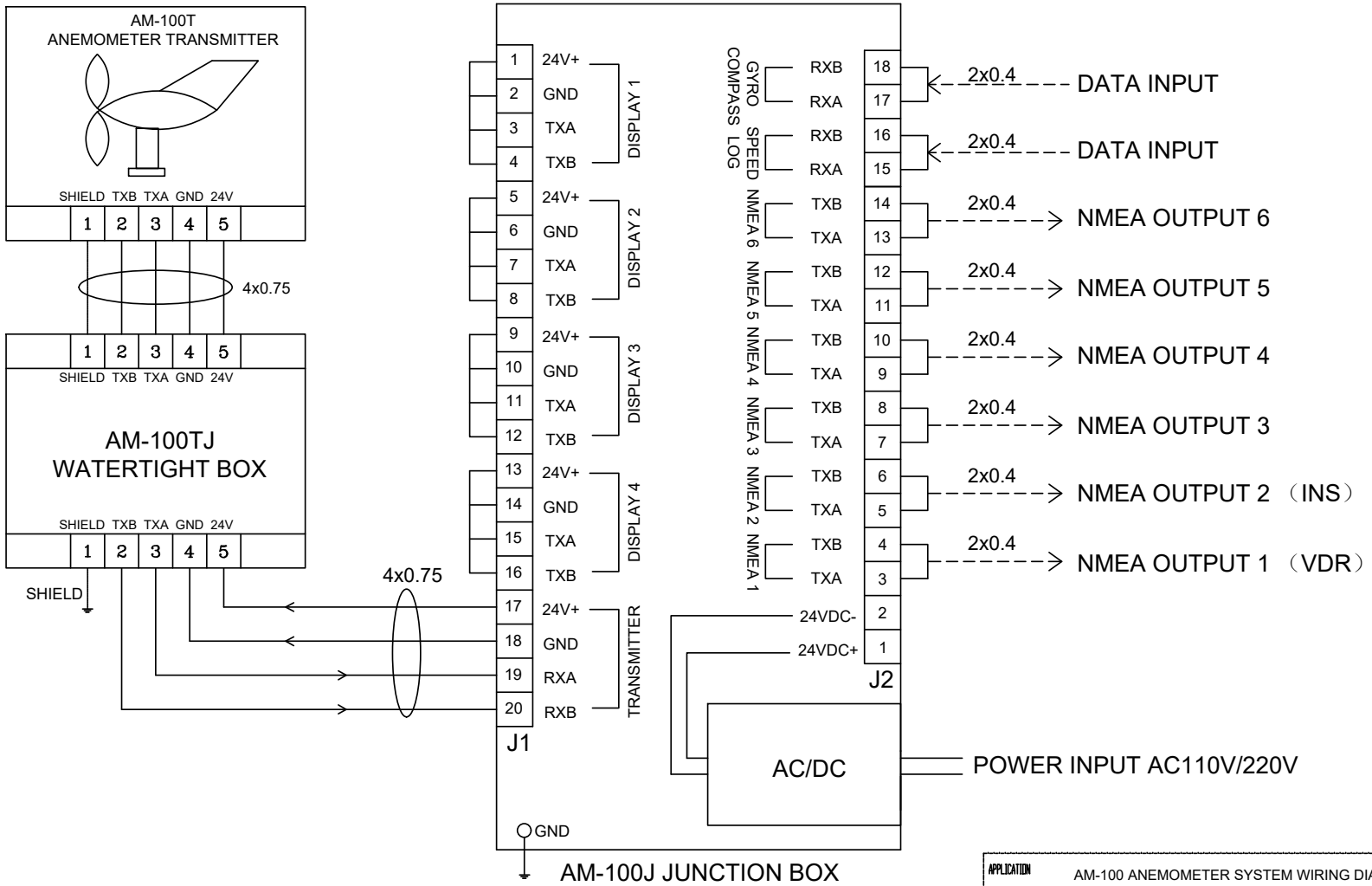

NOTE:
NMEA 5,6 only output relative wind angle;
NMEA 1,2,3,4 output both relative and theoretical (when valid) wind angle.

NO.	DATE	REVISION & DESCRIPTION	REVIEWED / CHECKED SIGNATURE
1			

APPLICATION	AM-100 ANEMOMETER SYSTEM WIRING DIAGRAM
DATE	
APPROVAL	
CHECKED	
DRAWING	
DWG. NO.	AM100-ID-002

NEW SUNRISE CO., LTD.

NO.	DATE	REVISION & DESCRIPTION	REVIEWED / CHECKED SIGNATURE
1			

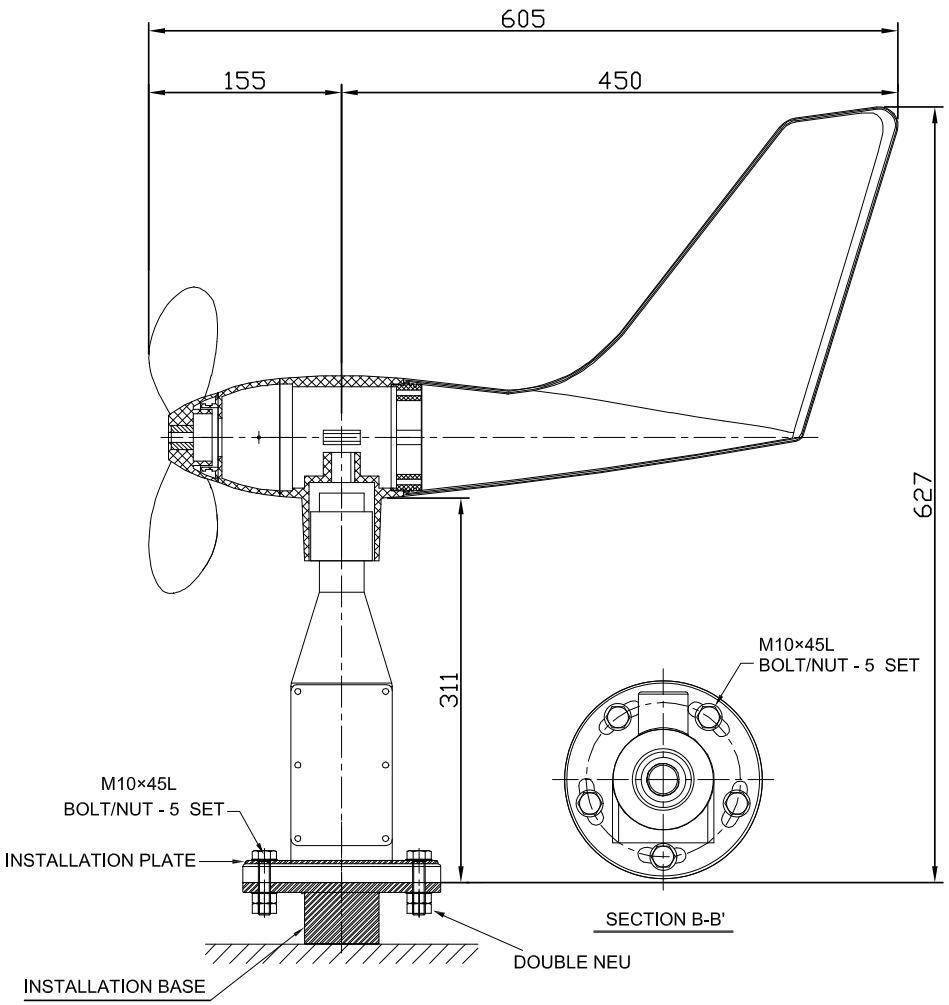

INSTRUCTIONS

1. The plate is installed upon the transmitter base to be protected from cracking when hardly fastened.
2. Two half-circle plates make one complete circle.
3. Material: Steel A3,Zn coating.

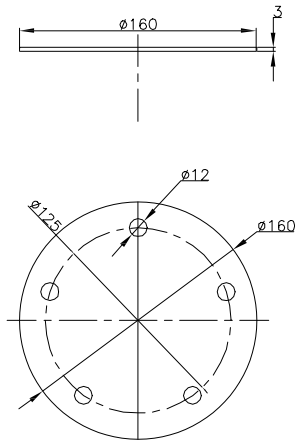

INSTALLATION PLATE

INSTRUCTIONS

1. The Base is fixed on mast directly or with a support pole by welding.
2. The center of one of five long holes points to bow while the base is fixed.
3. While welding,the base should be kept horizontally.
4. Material: Steel A3,Zn coating.

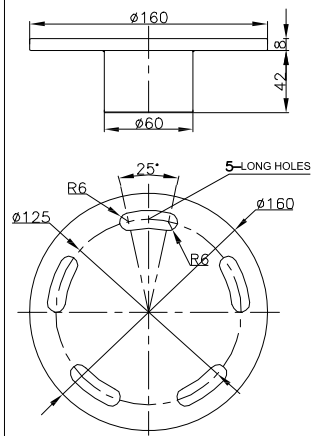

INSTALLATION BASE

Materials:

1.Wing part : PC
2.Lower part : Nylon with 30% glass
3.Installation plate/base : Steel A3,Zn coating

APPLICATION	AM-100T ANEMOMETER TRANSMITTER SIZE DRAWING		
DATE		ITEM	SIZE A4
APPROVAL		SCALE N/S UNIT	
CHECKED			
DRAWING		NSR marine	NEW SUNRISE CO., LTD.
DWG. NO.	AM100-ID-003		

NO.	DATE	REVISION & DESCRIPTION	REVIEWED / CHECKED SIGNATURE
0			

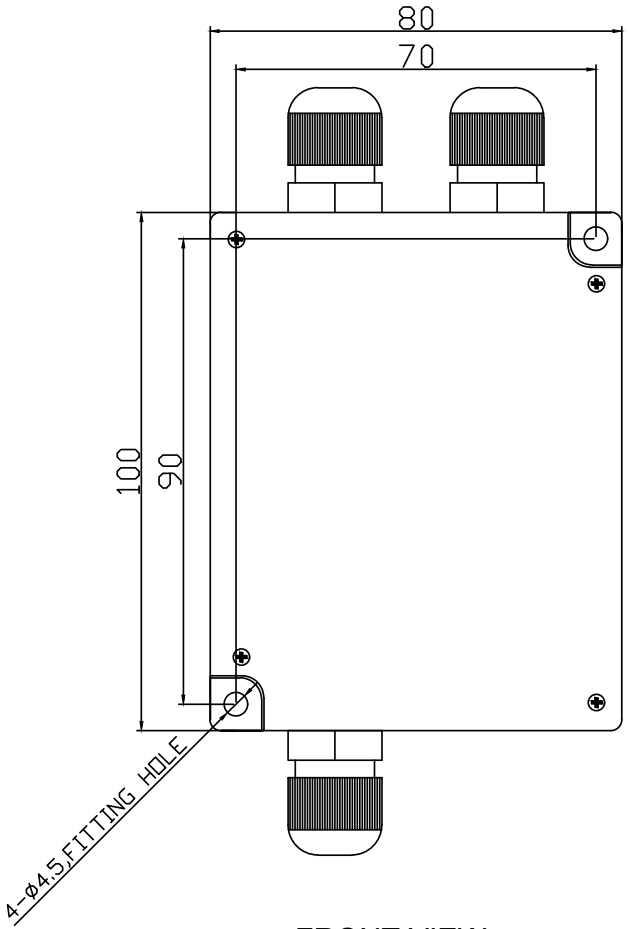

FRONT VIEW

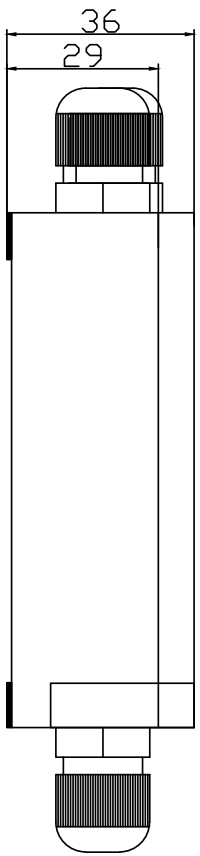

SIDE VIEW

APPLICATION	AM-100TJ WATERTIGHT BOX SIZE DRAWING
DATE	ITEM / SIZE A4
APPROVAL	SCALE N/S / UNIT mm / FINISH
CHECKED	
DRAWING	
DWG. NO.	

NSR NEW SUNRISE CO., LTD.

NO.	DATE	REVISION & DESCRIPTION	REVIEWED	CHECKED
0			SIGNATURE	

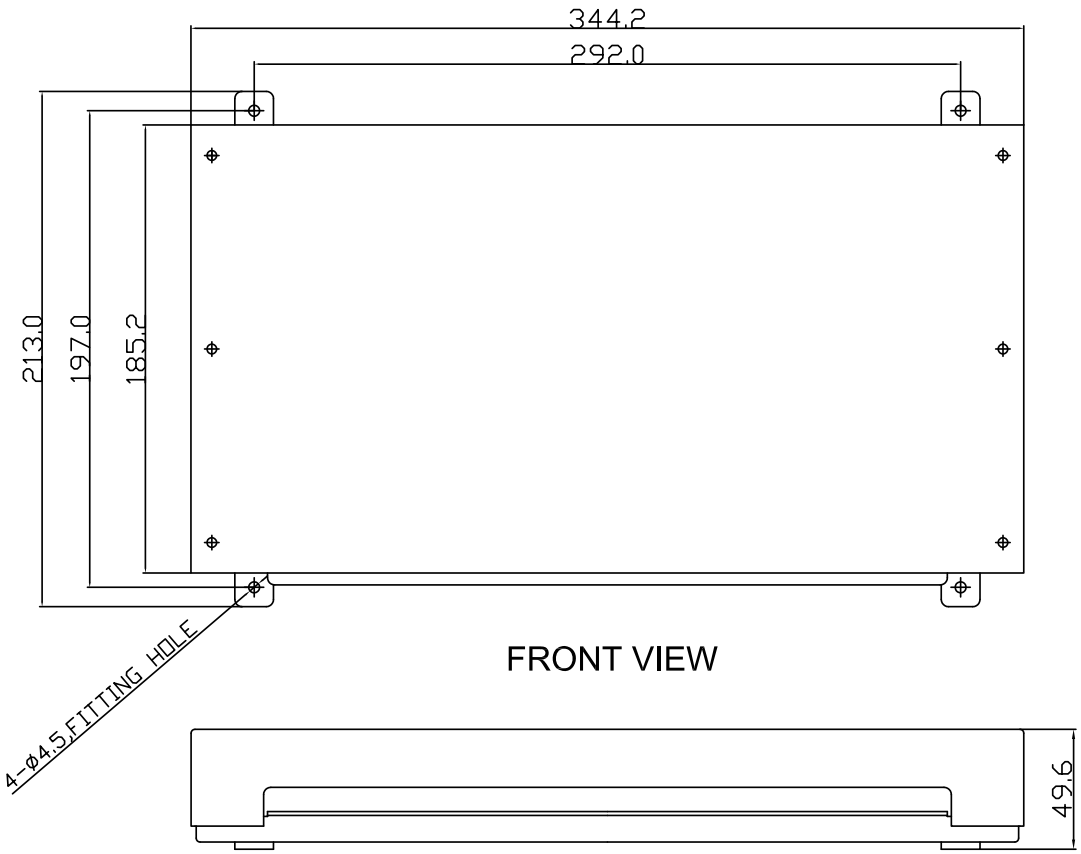

FRONT VIEW

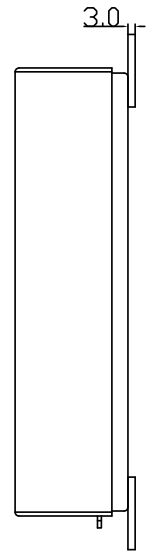

SIDE VIEW

BOTTOM VIEW

APPLICATION	AM-100J JUNCTION BOX SIZE DRAWING				
DATE		ITEM		SIZE	A4
APPROVAL		SCALE N/S	UNIT mm	PROJECTION	▽▽▽▽0.8S ▽▽▽6.3S ▽▽12S ▽100S
CHECKED					
DRAWING					
DWG. NO.	AM100-ID-005	NSR marine	NEW SUNRISE CO., LTD.		

NO.	DATE	REVISION & DESCRIPTION	REVIEWED / CHECKED SIGNATURE
0			

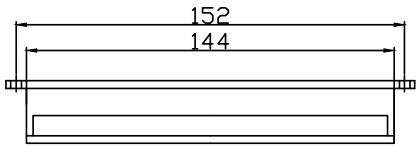

TOP VIEW

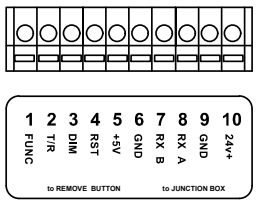

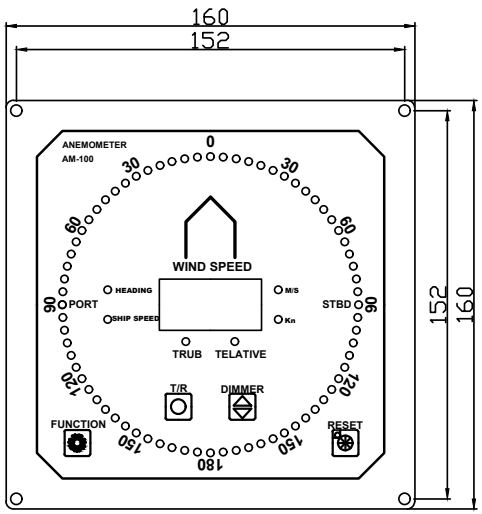

FRONT VIEW

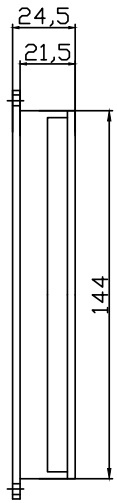

SIDE VIEW

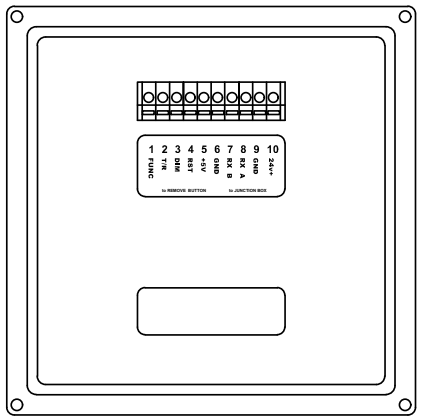

REAR VIEW

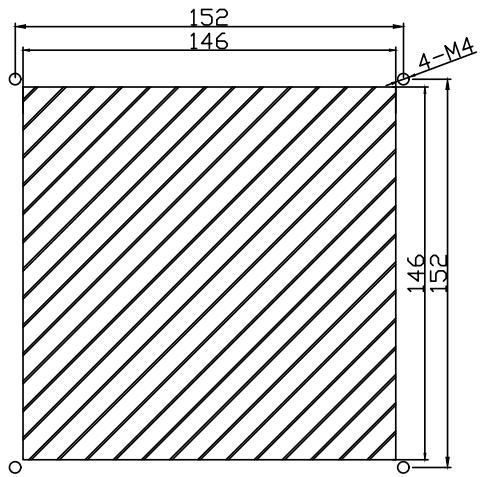

YARD AREA CUTTING SIZE

APPLICATION	AM-100D DISPLAY UNIT SIZE DRAWING		
DATE		ITEM	SIZE A4
APPROVAL		SCALE N/S UNIT mm	
CHECKED			
DRAWING		NSR marine	NEW SUNRISE CO., LTD.
DWG NO.	AM100-ID-006		

NO.	DATE	REVISION & DESCRIPTION	REVIEWED / SIGNATURE	CHECKED
0				

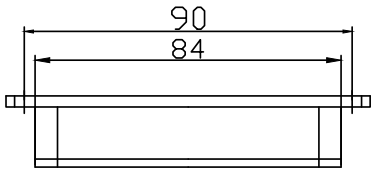

TOP VIEW

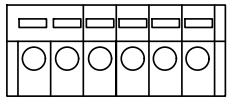

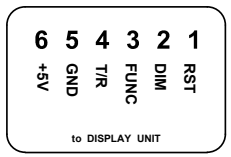

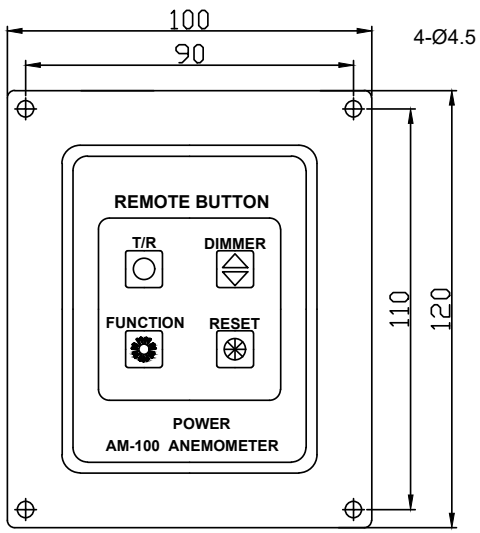

FRONT VIEW

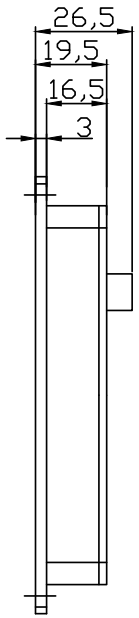

SIDE VIEW

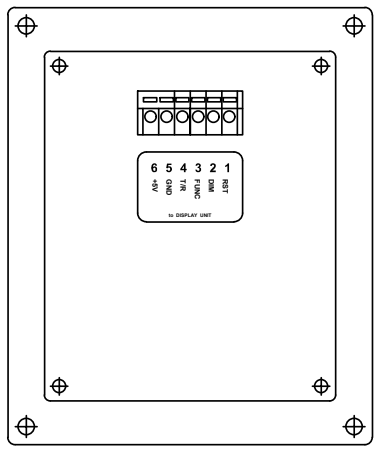

REAR VIEW

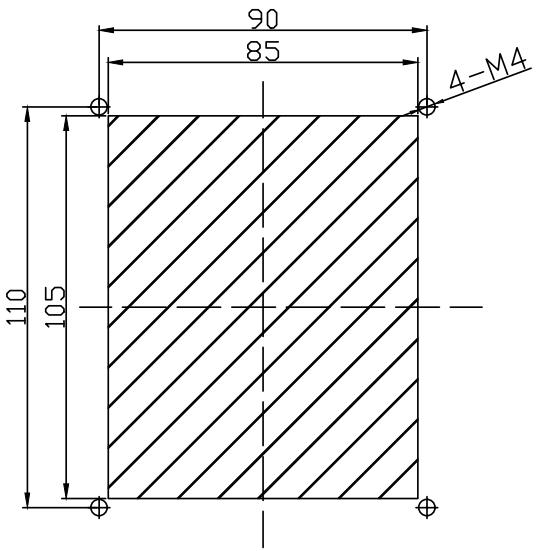

YARD AREA CUTTING SIZE

APPLICATION	AM-100R REMOTE BUTTON SIZE DRAWING		
DATE		ITEM	SIZE A4
APPROVAL		SCALE N/S UNIT mm	
CHECKED			
DRAWING			NEW SUNRISE CO., LTD.
DWG NO.	AM100-ID-007		